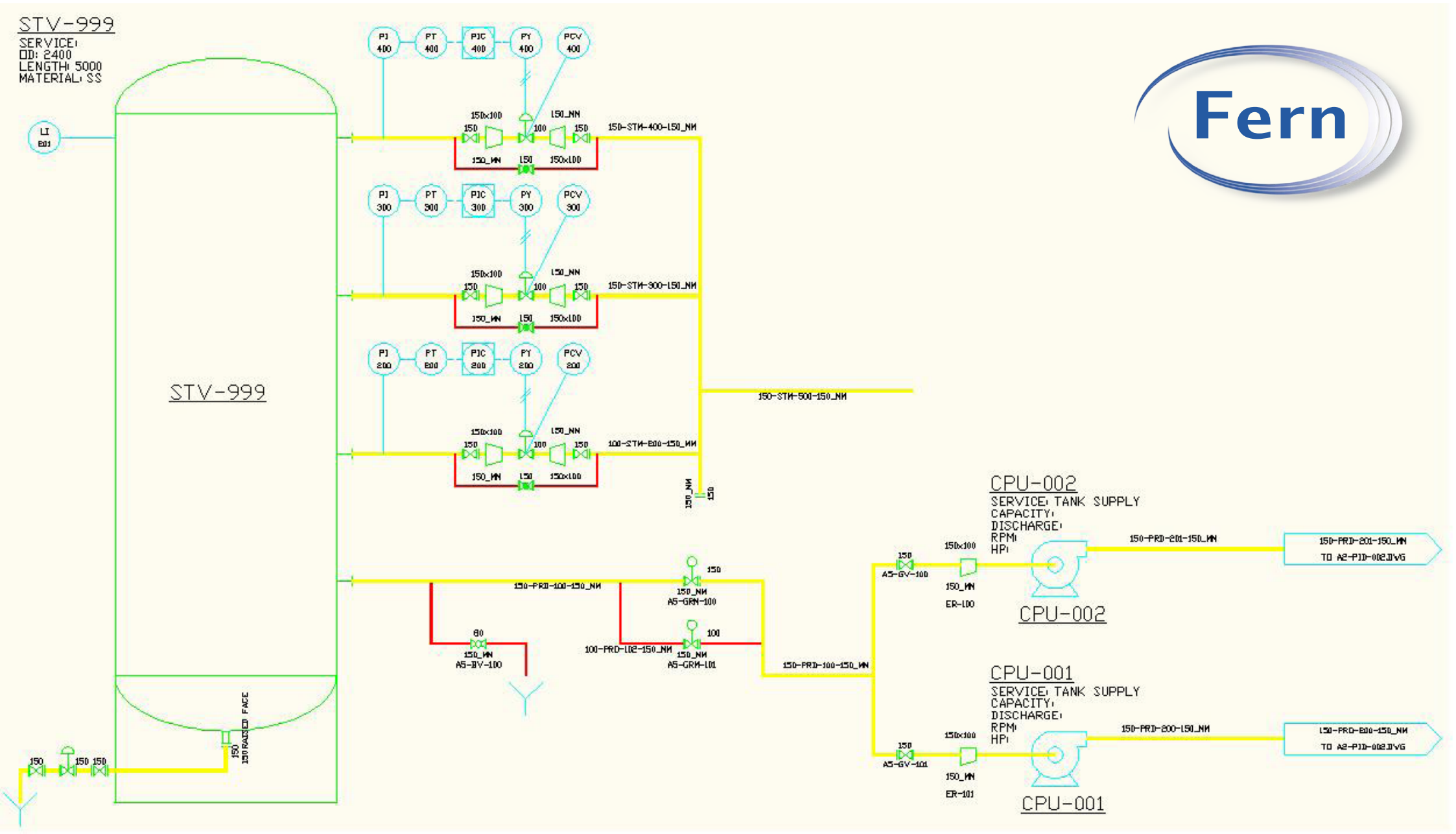
STV-999
SERVICE:
OD: 2400
LENGTH: 5000
MATERIAL: SS
STV-999
LI 801
PI 400
PT 400
PIC 400
PY 400
PCV 400
PI 300
PT 300
PIC 300
PY 300
PCV 300
PI 200
PT 200
PIC 200
PY 200
PCV 200
150x100
150_MN
150-STM-400-150_MN
150-STM-300-150_MN
150-STM-200-150_MN
100-STM-200-150_MN
150-PRD-100-150_MN
A5-GRN-100
A5-BV-100
100-PRD-102-150_MN
A5-GRN-101
A5-GV-100
A5-GV-101
ER-100
ER-101
CPU-002
SERVICE: TANK SUPPLY
CAPACITY:
DISCHARGE:
RPM:
HP:
150-PRD-200-150_MN
150-PRD-201-150_MN
TO A2-PID-002.DWG
CPU-001
SERVICE: TANK SUPPLY
CAPACITY:
DISCHARGE:
RPM:
HP:
150-PRD-200-150_MN
150-PRD-200-150_MN
TO A2-PID-002.DWG
150 RAISED FACE